Reliable, Efficient, Flexible

Robots and Automation Systems

world of innovation

World-leading Technology
Decades of robot expertise

Well over 70,000 WITTMANN robots in the field prove every day that WITTMANN has the best robots for highly economical production – from simple high-volume parts to complex high-tech components. WITTMANN robots stand for maximum availability, shortest cycle times and long maintenance intervals. Our experience and innovative strength over decades are your competitive advantage. Every application has its own specific requirements for automation. We say: no compromises.

Our range of different handling concepts offers the most suitable automation solution for any application challenge.

Kick-forward design

- No moving robot components behind the Z-axis.
- Advantages on smaller injection molding machines

Kick-back design

- For improved payload distribution.
- Space saving in height.
- Lots of design freedom for the gripper.

The first thing to consider when picking the right robot is the clamping force of the injection molding machine:

- 20 to 300 t: Robots with a fixed demolding axis are a good choice.
- 300 to 1,200 t: Robots with a movable demolding axis give you room for complex grippers and keep the overall height compact.
- 1,200 to 5,000 t: Moving X-axis technology is ideal for very large grippers and additional rotary axes.

Demolding axis (X-axis)

The massive aluminium profile beam ensures high torsional stiffness. The vertical axis is flanged directly to the demolding axis. For optimum force transmission in highly dynamic operation, the linear guides of the demolding axis and the horizontal axis are arranged one above the other on the main slide.

- Reduction of vibrations.
- High precision during insertion and removal.

BUS technology

All signal and encoder cables are routed directly to the control cards on the robot.

- Reduced moving masses thanks to minimal cabling.
- Easy expansion and adaptability.

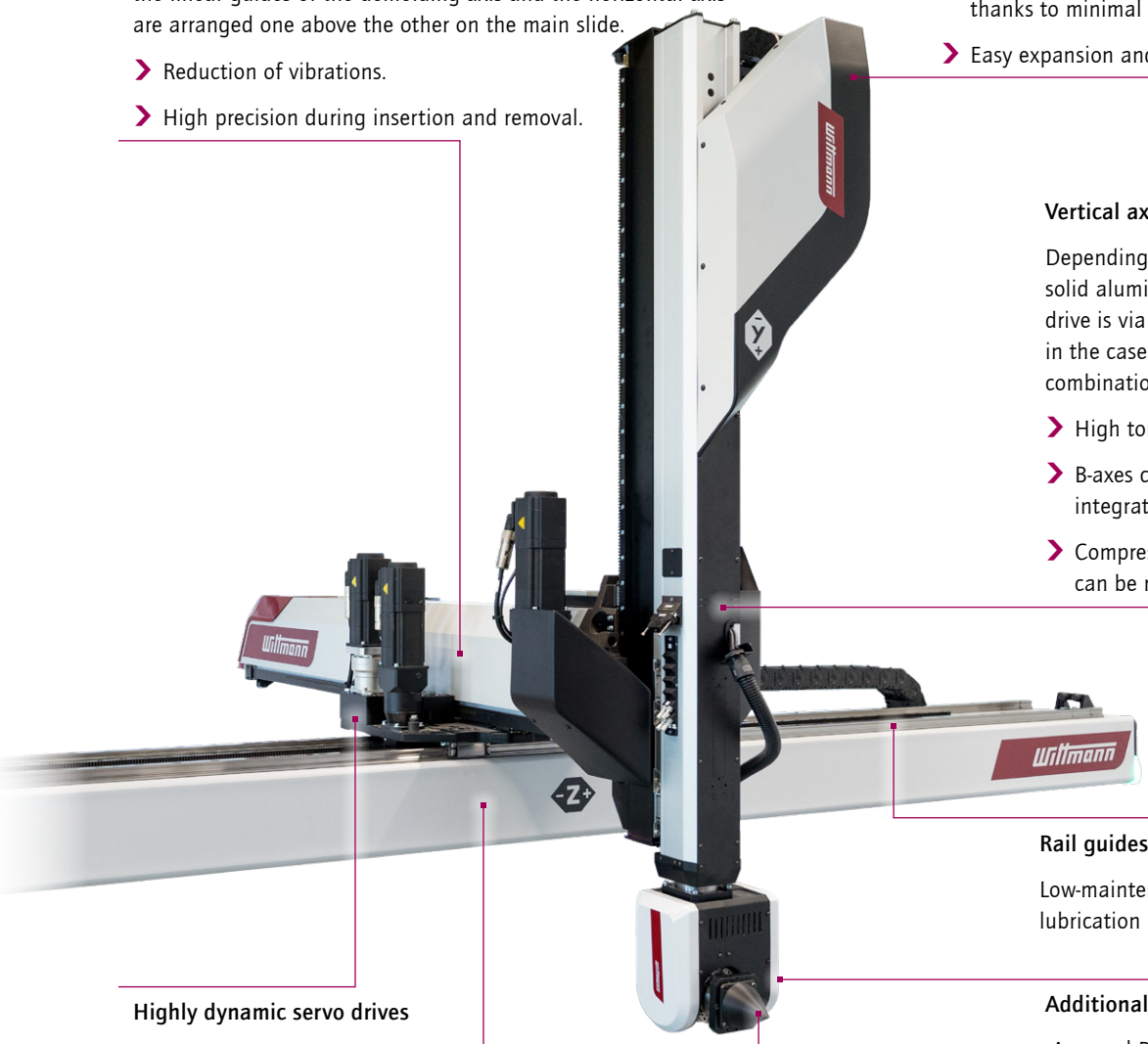

Vertical axis (Y-axis)

Depending on the size, available in solid aluminium or steel design. The drive is via rack and pinion or belt, or in the case of telescopic axes, via a combination of both.

- High torsional stiffness.
- B-axes can be space-efficiently integrated directly into the profile.
- Compressed air and control lines can be routed internally.

Rail guides

Low-maintenance design allows for lubrication intervals of 1 year or more.

Highly dynamic servo drives

in all main axes with absolute encoder system.

Additional rotary axes (optional)

A-servo | B-servo | C-servo

- Any combination for maximum flexibility

Horizontal axis (Z-axis)

For Z-strokes of 3 m or more, WITTMANN uses rack and pinion drive components in all robots.

- No belt stretching, even with long strokes.
- The lubrication cage ensures optimum lubrication and a long service life for the drive system.

Swivel axis (C axis)

- Plenty of freedom of movement in the tool compartment thanks to compact design.

Maximum Efficiency, Best Price-Performance Ratio

The W9 and WX series

With the modular design and consistent platform strategy from WITTMANN, the robots in the WX series combine high flexibility with cost efficiency. Universal, future-proof, flexible – robots in the WX series from WITTMANN automate entire production halls. The very wide range of available sizes enables highly efficient automation for every application. All main axes are equipped with highly rigid ball-bearing guide systems. The steel rails used reinforce the overall structure of the robot.

Sample models

WX142 – WX143

- Payload up to 30 kg.
- Belt drive with aluminium profile on the demolding axis.
- Vertical (telescopic) axis made of aluminium.

WX152 – WX163

- Payload up to 40 kg.
- Belt drive with aluminum profile or
  rack and pinion drive with steel profile on the demolding axis.
- Vertical (telescopic) axis made of aluminum or steel-aluminum combination.

WX173 – WX193

- Payload up to 130 kg.
- Rack and pinion drive and steel profile on the demolding axis.
- Vertical (telescopic) axis made of steel.

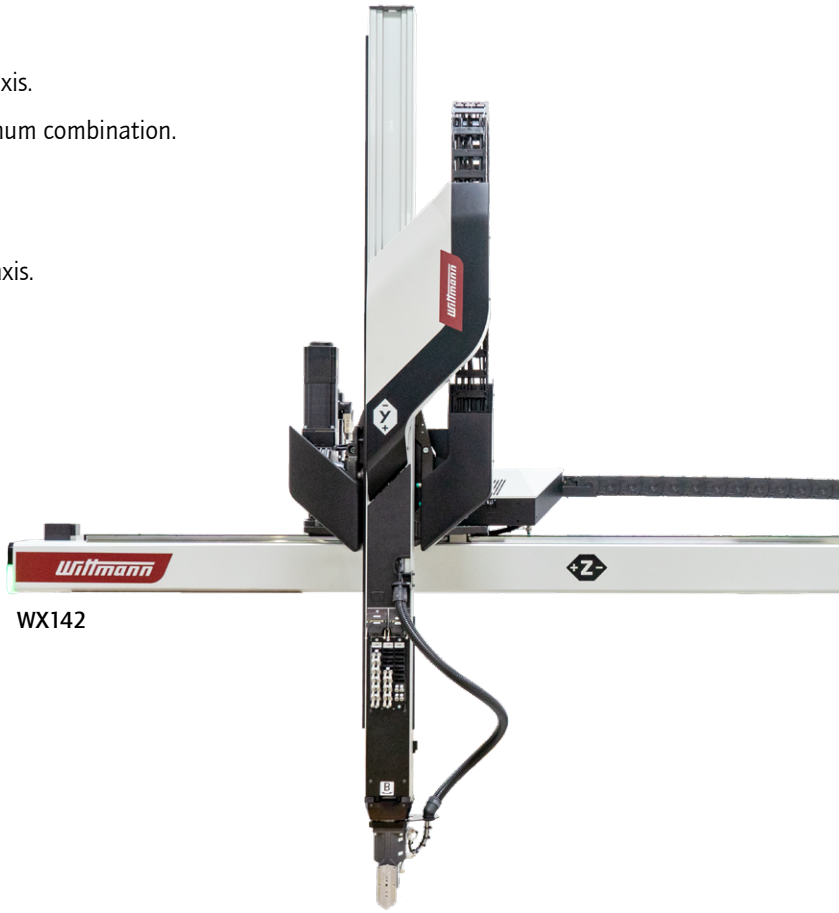

WX142

WX153

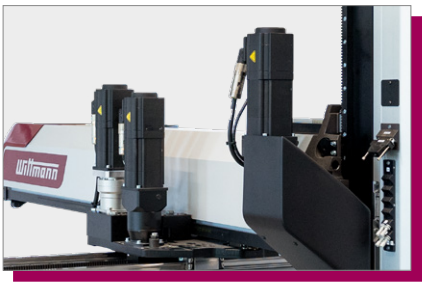

The Highlights

Energy efficiency
20% improvement in energy efficiency thanks to integrated energy storage in the multi-axis servo module.

EcoVacuum
Smart vacuum technology reduces compressed air consumption.

Durability
Reinforced profiles for a long operating life even under high loads.

ACD (Automatic Collision Detection)
For the safe prevention of collision damage inside and outside the mold area.

Optimized integration of electronics and connections
Minimal number of cables thanks to decentralised arrangement of electronic components and integrated connections for vacuum and gripper circuits.

Low noise
Quiet operation thanks to optimised energy chain.

Optimized lubrication system
Simplifies maintenance.

AmbiLED status indication
For clear communication of operating modes.
Green: Robot is operating in automatic mode.
Blue: Manual intervention is required.
Red: Safety door is open.

SPACE-SAVING INSTALLATION

With highly integrated circuits and compact servo modules, WITTMANN robots do not require an external control cabinet – even in the standard version. This means:

- Space savings next to the injection molding machine.
- Shortest motor and encoder cables.
- Significantly fewer cables and connectors on the robot.
- Increased operational reliability.

Additional advantage:

External I/O modules allow peripheral devices to be integrated and controlled directly via the robot.
For applications with limited accessibility, external control cabinet solutions are available.

Communication Platform for the Entire Periphery

R9 – The robot controller

The TeachBox of the R9 control system features a touchscreen and a very clear display with Live 3D animations. For highly precise control of movements and programming, additional buttons with tactile feedback are available. All programmes can be exported to USB or stored on the robot control.

Advantages

- Excellent readability with high resolution (1280 × 800 px) and large 10.1" display.
- Force monitoring during insertion and removal as standard.
- Automatic monitoring of maintenance intervals.
- Automatic ACD collision monitoring.
- Convenient PC programming with complete transfer of the TeachBox HMI.
- ControlRoom TeachBox
  Control of WITTMANN auxiliary equipment via the R9 TeachBox.

ASSISTANTS FOR FLEXIBLE PROGRAMMING

The **QuickNew Wizard** makes programming child's play. With the R9 TeachBox, the animated program editor displays even complex applications in a very simple and clear layout.

The **TextEditor** offers experienced programmers unlimited freedom. Each sequence is created on a line-by-line basis. To do this, the desired function is executed on the robot and transferred to the program at the touch of a button. The free assignment of names for I/O, cylinders, gripper and vacuum circuits, as well as the comment function, allow customisation to individual requirements and easy readability of the process.

QuickEdit combines flexibility with security. Commands can be easily changed and values entered, but the general program syntax remains protected.

Movements adapted to the machine cycle reduce energy consumption in **EcoMode** and protect the mechanics.

The optimized removal curve with **SmartRemoval** shortens handling time and saves energy.
[*SmartRemoval Patents: EP 2560802B, US 9387614, CN 102858515]

QuickNew

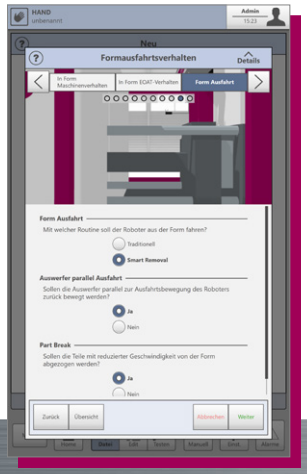

ControlRoom TeachBox

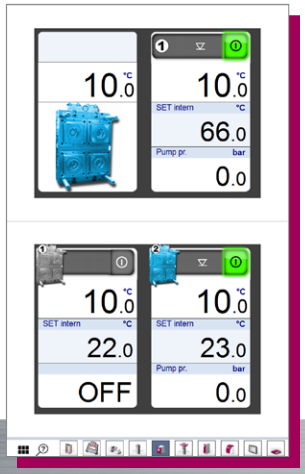

QuickEdit

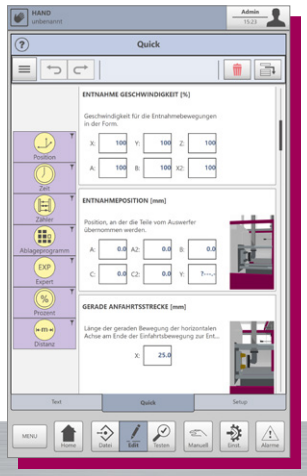

When Speed Is of the Essence

Sonic high-performance robots

Sonic is WITTMANN's answer to the demand for the shortest cycle times in high-performance applications. Reduced moving mass allows for quick acceleration and deceleration, with cycle times near 4 s.

Sonic is the first choice for applications that require high dynamics with low loads. For example, in medical technology or the packaging industry – with or without IML. On request, it can be supplied as a customised, process-integrated production cell from a single source.

Sample models

Sonic 131 to 143

- Cycle times under 7 s.
- Movable demolding axis for injection molding machines with a clamping force of up to 500 t.

Sonic 143

The Efficient Choice for Pick & Place

The Primus series

Primus robots stand for cost-effective performance in pick & place applications. They are used on injection molding machines with clamping forces ranging from 20 to 900 t. Often used as an entry-level model with full scale-up flexibility.

Advantages

- R9 control and R9 TeachBox as standard.
- Up to 5 energy-optimised servo main axes including lubrication systems.
- EcoVacuum optional for extremely economical compressed air consumption.
- Programming with QuickNew Wizard and TextEditor as standard.
- Extremely smooth running with minimal noise emissions.
- Small models with ribbed aluminium profiles and belt drives for minimal moving masses and short removal times.
- Interface for MES.

Primus 118

Primus 148T

Robust and Flexible
Sprue removal devices

WX90
the flexible solution with a fast ROI

With its servo-driven and freely programmable axes, the WX90 also handles simple part removal and handling tasks – precisely and in the tightest of spaces within the machine safety enclosure. It impresses with its extremely smooth movements and, at the same time, its high dynamics. On all injection molding machines with clamping forces from 35 to 150 t.

In order to equip injection molding machines of various brands, the WX90 has its own compact control cabinet. This is flanged directly to the console and does not require separate floor space.

Advantages:

- Intuitive operation via the industry-proven R9 Teachbox.
- Fully integrable in conjunction with a WITTMANN injection molding machine.
- Programming with QuickNew Wizard and TextEditor as standard.

WP80
the robust solution for simple removal tasks

The robust design and excellent damping reduce vibrations in the vertical axis and ensure highly precise removal – on all injection molding machines from 25 to 300 t.

Advantages:

- Convenient Net8 control.
- Up to 50 individual programs.
- Additional vacuum, gripper and peripheral signals can be programmed.

Wittmann

Customized Efficiency
Automation cells

From cost-optimized removal systems to highly complex, process-integrated production cells, including testing and provisioning peripherals, WITTMANN develops and builds automation solutions tailored to the respective application. WITTMANN draws on a very extensive range of robots and automation components from its own production facilities and also integrates third-party systems into the overall concept. No expensive overengineering, just customized efficiency. And best of all, as a customer, you have only one central point of contact for the entire production cell: WITTMANN.

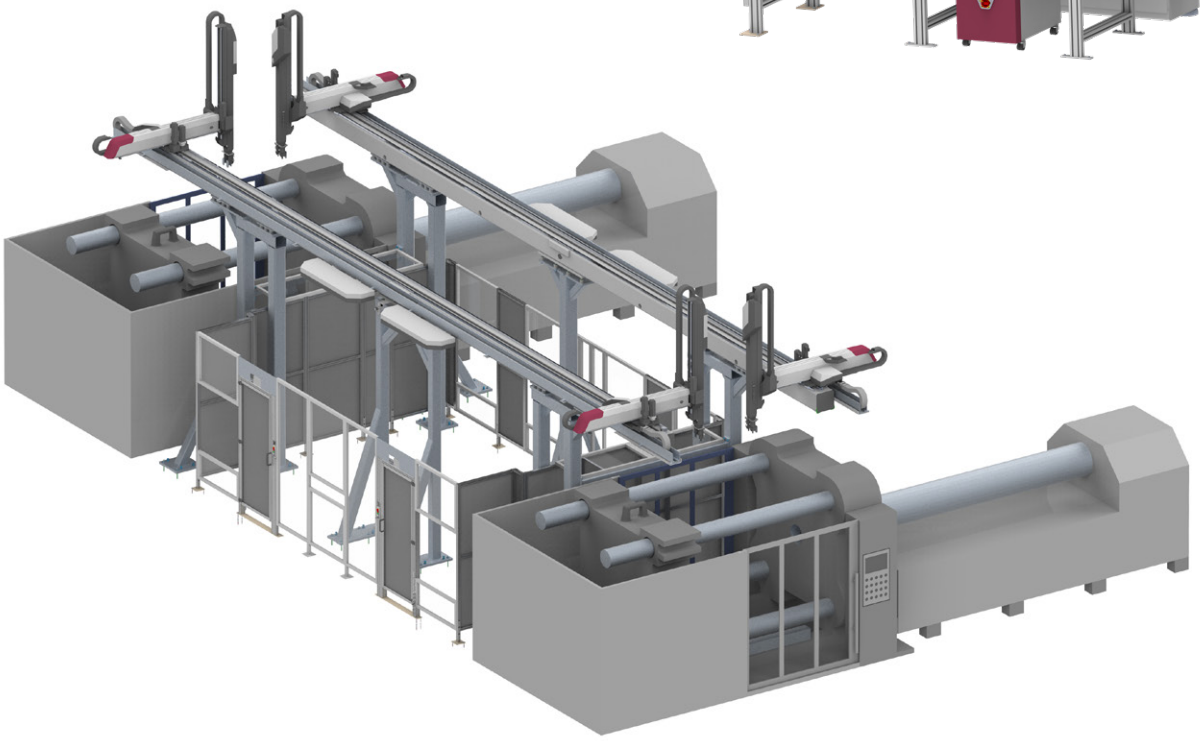

For Even More Freedom
Additional axes

Rotary axes are our speciality. WITTMANN offers additional rotary axes at the end of the vertical axis, enabling rotation around the X-, Y-, and Z-axis planes.
Programming is done in increments of 0.1° for the finest adjustments.
The extremely compact design minimizes mold opening movements.

- Servo A-axis for arbitrary rotation of grippers and finished parts for all conceivable storage positions.
- Servo B-axis for flexible gripper rotation between the mold halves and arbitrary orientation when depositing the parts.
- Servo C-axis for part removal from either the movable or fixed mold half and flexible presentation at a downstream inspection or automation system.

Various compact combined and single rotary axis modules.

Our Robots in Action

User examples

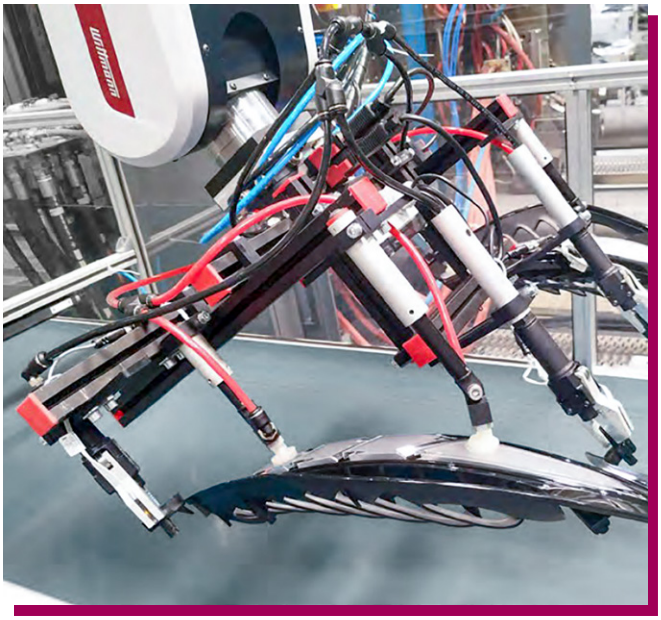

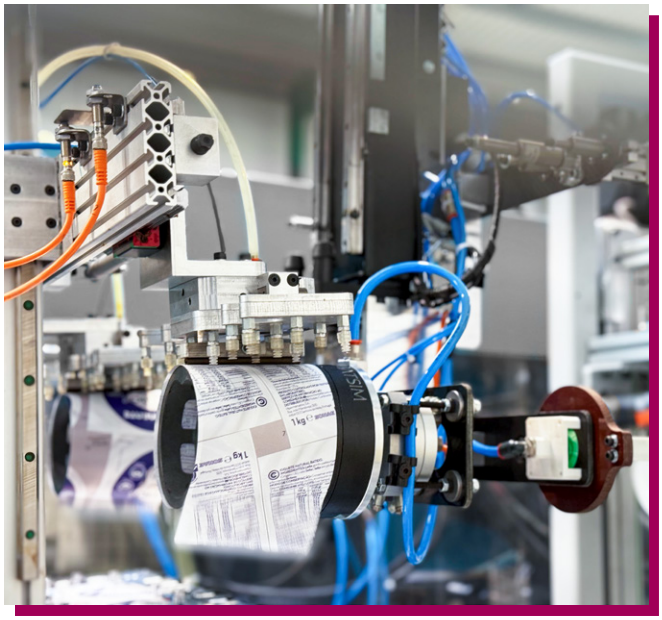

Top left: WX series robots for part placement behind the clamping platen.

Bottom left: Production hall with robots for a wide range of requirements.

Top right: Pick & place application with Primus robots.

Bottom right: Customized automation solutions/grippers.

Technical specifications

Model	Standard horizontal stroke [Z-axis][1] mm	Standard vertical stroke [Y-axis][1] mm	Standard demolding stroke [X-axis][1] mm	Standard payload[1] kg	Vertical stroke [single or telescopic]	Second vertical axis	Demolding stroke [fixed or movable axis][2]	Typical Application	Typical application cycle time[3] s
WX118	1.500–2.500	800–1.200	460–660	6	single	–	fixed	Automation	> 10
Primus 118	1.500–2.500	800–1.200	460–660	6	single	–	fixed	Pick & Place	8–15
W921	1,250–5,000	800–1,400	350–550	12	single	–	movable	Automation	> 10
W923	1,250–5,000	800–1,400	350–550	12	telescopic	–	movable	Automation	> 10
W922	1,250–5,000	1,000–1,400	350–550	15	single	–	movable	Automation	> 10
Sonic 131	1,500–2,500	800–1,200	500	3	single	–	movable	High-speed	< 7
W928	1,500–5,000	1,200–1,400	905–1,105	12	single	–	fixed	Automation	> 10
W928S	1,500–5,000	1,200–1,400	730–930	12	single	yes	fixed	Automation	> 10
WX138	1,500–5,000	1,000–1,400	950–1,150	12	single	–	fixed	Automation	> 10
W931	2,000–6,000	1,000–1,400	800	12	single	–	movable	Automation	> 10
Primus 126	1,500–6,000	1,000–1,400	500–800	10	single	–	movable	Pick & Place	8–15
Primus 126T	1,500–6,000	1,000–1,400	500–800	10	telescopic	–	movable	Pick & Place	8–15
Primus 128	1,500-6,000	1,000-1,600	500-800	15	single	–	movable	Pick & Place	8-15
Sonic 142	2,000–4,000	1,200–1,600	500–900	7	single	–	movable	High-speed	< 7
Sonic 143	2,000–4,000	1,200–1,400	500	5	telescopic	–	movable	High-speed	< 7
WX142	2,000–6,000	1,200–1,600	500–900	30	single	–	movable	Automation	> 10
WX143	2,000–7,000	1,200–1,800	500–900	20	telescopic	–	movable	Automation	> 10
W938T	1,500–4,000	1,400–1,800	900–1,200	15	telescopic	–	fixed	Automation	> 10
WX152	2,500–9,000	1,400–1,600	1,200	30	single	–	movable	Automation	> 10
Primus 148	2,500–6,000	1,400–1,800	800–1,200	30	single	–	movable	Pick & Place	8–15
Primus 148T	2,500–6,000	1,600–2,000	800–1,200	20	telescopic	–	movable	Pick & Place	8–15
WX153	2,500–9,000	1,600–2,600	1,200	30	telescopic	–	movable	Automation	> 10
WX163	2,500–9,000	2,000–2,600	1,200–1,500	40	telescopic	–	movable	Automation	> 10
WX173	3,000–9,000	2,400–3,000	1,200–2,000	50	telescopic	–	movable	Automation	> 10
WX183	3,000–9,000	2,800–3,600	2,000	110	telescopic	–	movable	Automation	> 10
WX193	3,000–9,000	2,800–3,600	2,000–3,000	130	telescopic	–	movable	Automation	> 10

[1] Special and customized configurations are available.
[2] Difference between „fixed“ and „movable“ on page 2.
[3] Cycle time for the entire workcell. (IMM + Robot + Automation)

Notes

» We develop **technologies that meet the demands of today and tomorrow**, saving materials and energy while protecting the climate. Across the entire injection molding process, from material handling to in-line recycling.
We live molding. «

(Dr. Werner Wittmann)

WITTMANN Technology GmbH
Lichtblaustrasse 10
1220 Vienna | Austria
T +43 1 25039-0
info.at@wittmann-group.com

YouTube
WittmannGroupTV

Robots and Automation | Article number: BP00000146 (English) | 2026/09 | Subject to change. | Printed in Austria.